KC-351

PoE-PD-enabled 10/100Base-TX to 100Base-FX Media Converters

Media Conversion

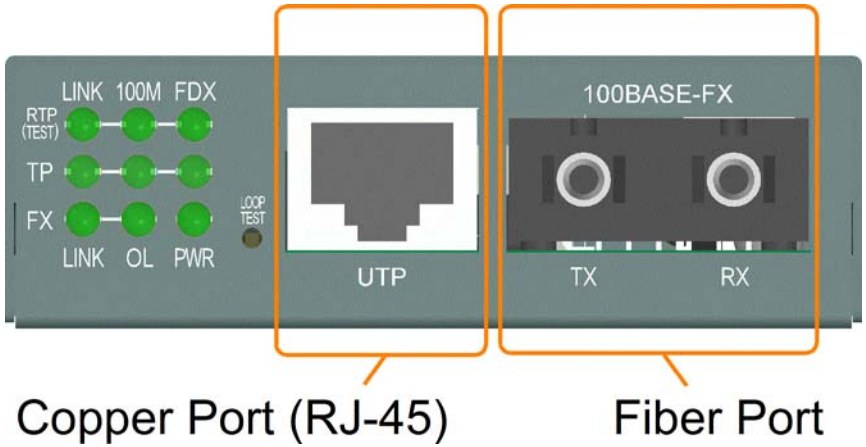

- 10Mbps, 100Mbps
- 10BASE-T
- 100BASE-TX
- Cat.5 or better

- 100Mbps
- 100BASE-FX
- Duplex MMF
- Duplex SMF
- Bi-Di single fiber
- CWDM

Benefit 1: Direct Conversion

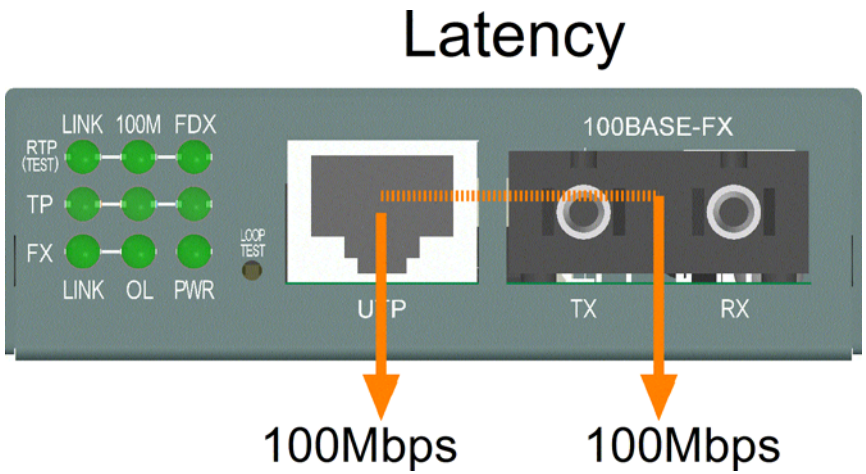

- No bridging conversion
- Direct conversion for 100M-to-100M conversion
- The least latency

Benefit 2: Link Fault Pass Through

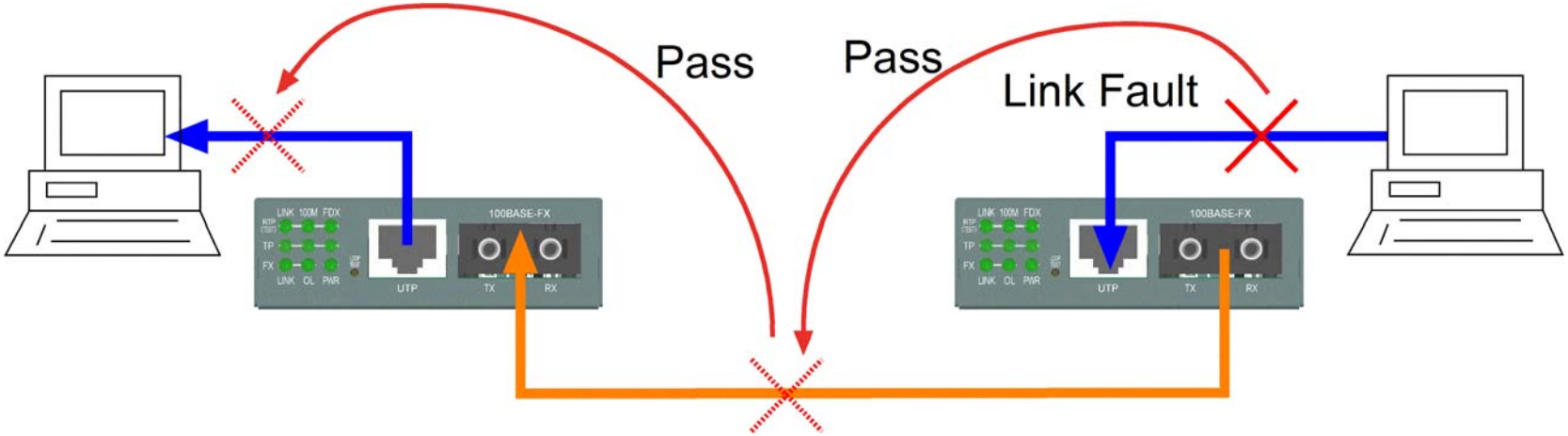

The device at local end is able to detect link fault at the remote copper connection.

Benefit 3: Configuration Switches

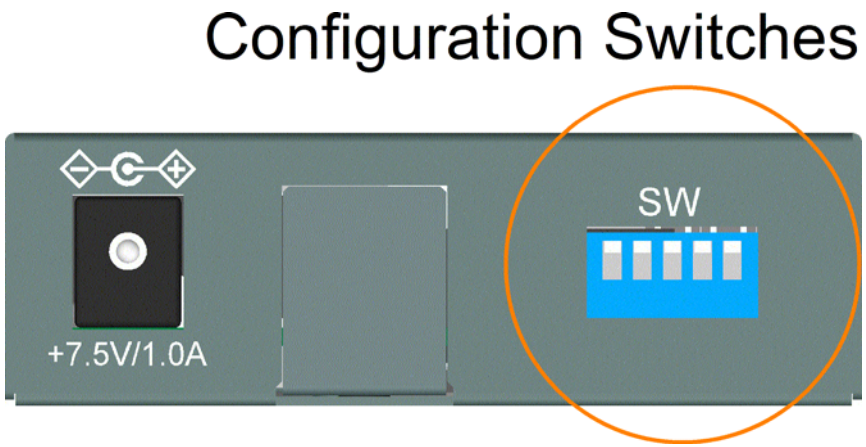

Allow to configure copper port to support connection to non-auto-negotiation devices.

Benefit 4: Remote TP Monitoring

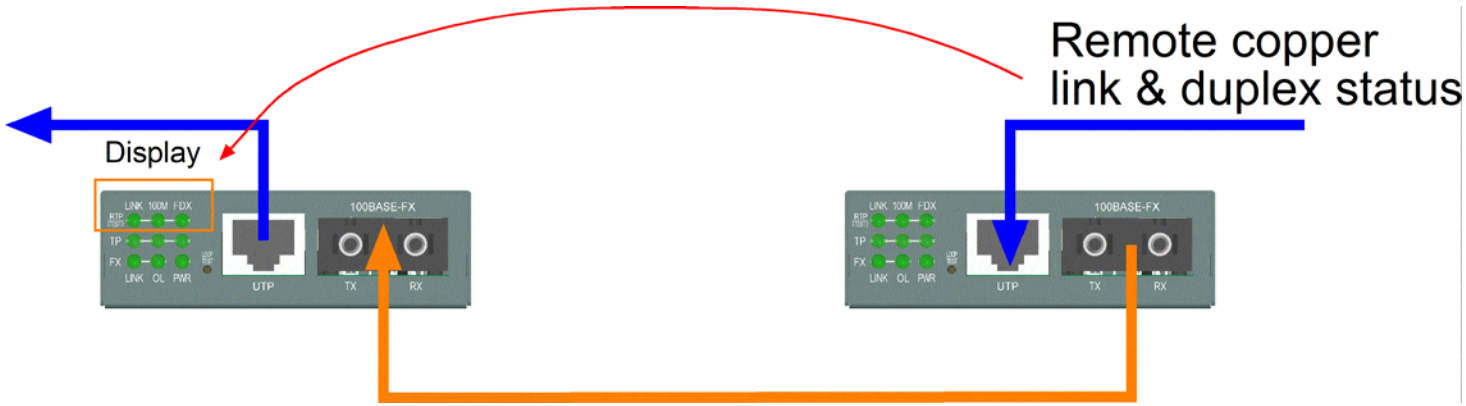

Allow to monitor the link status of the copper (TP) connection at the remote end.

Benefit 5: Remote Loopback Test

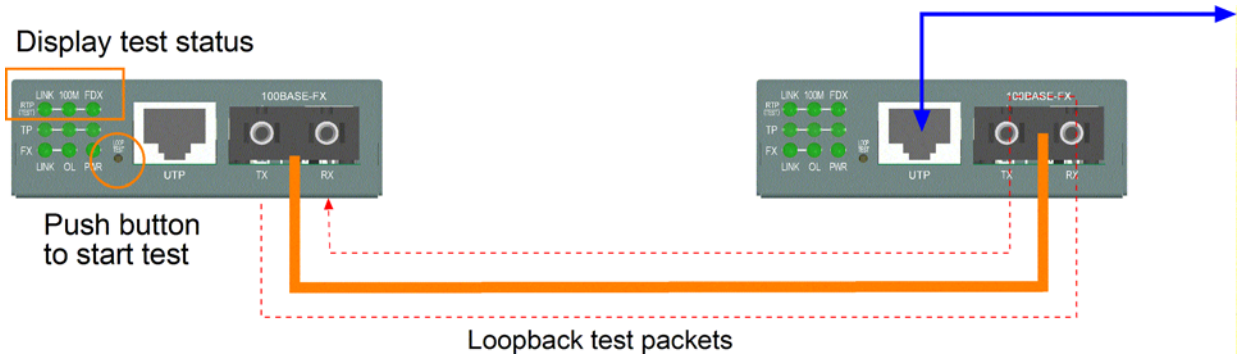

Allow to diagnose the fiber link with physical data transmission easily during installation .

Benefit 6: Three Power Methods

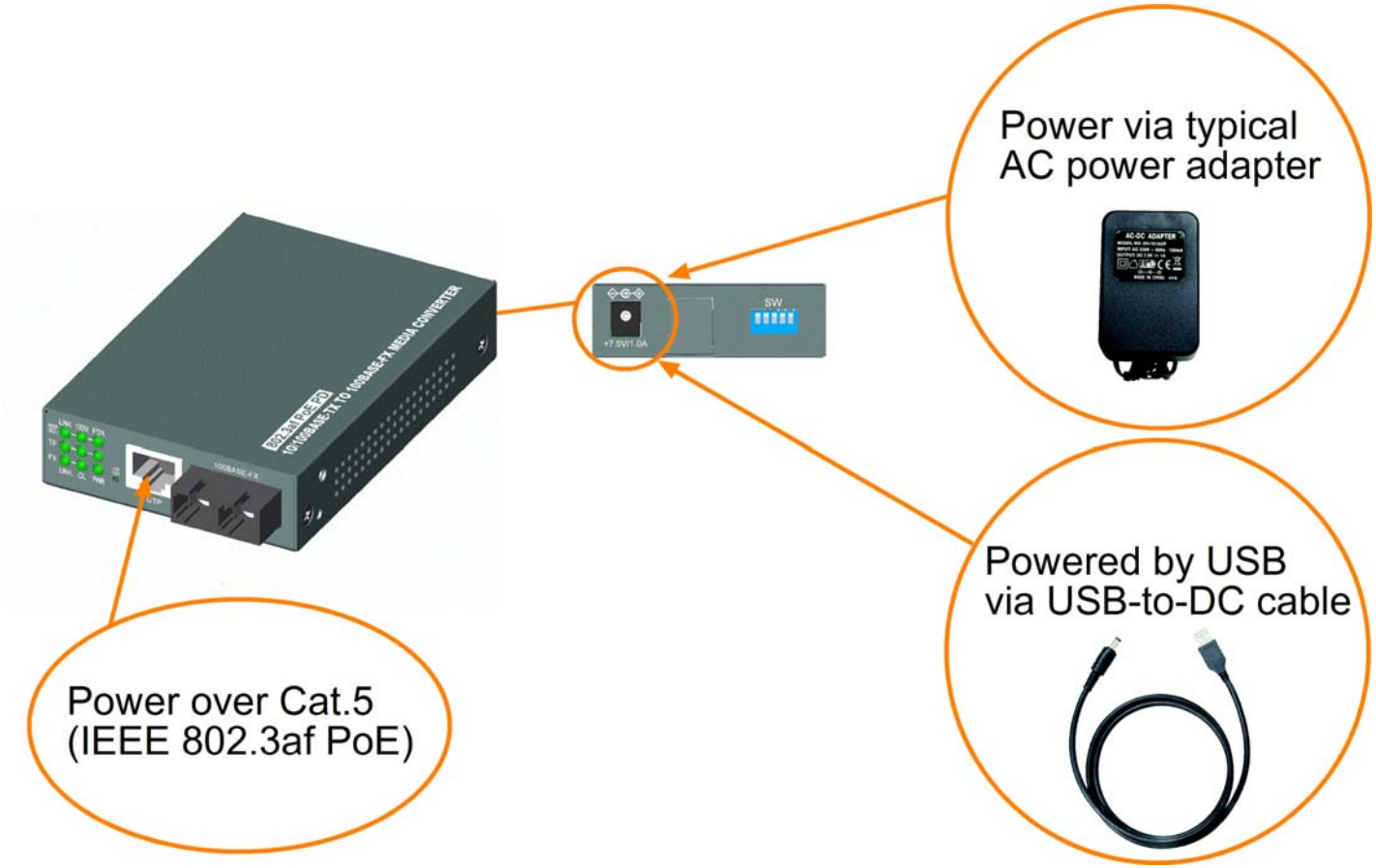

Benefit 7: IEEE Standard PoE

- IEEE 802.3af compliant
- Drawing power from all pairs on Cat.5
- Class 1 power classification
- Inter-operability guaranteed
- Operation safety guaranteed

Application 1: PoE Installation

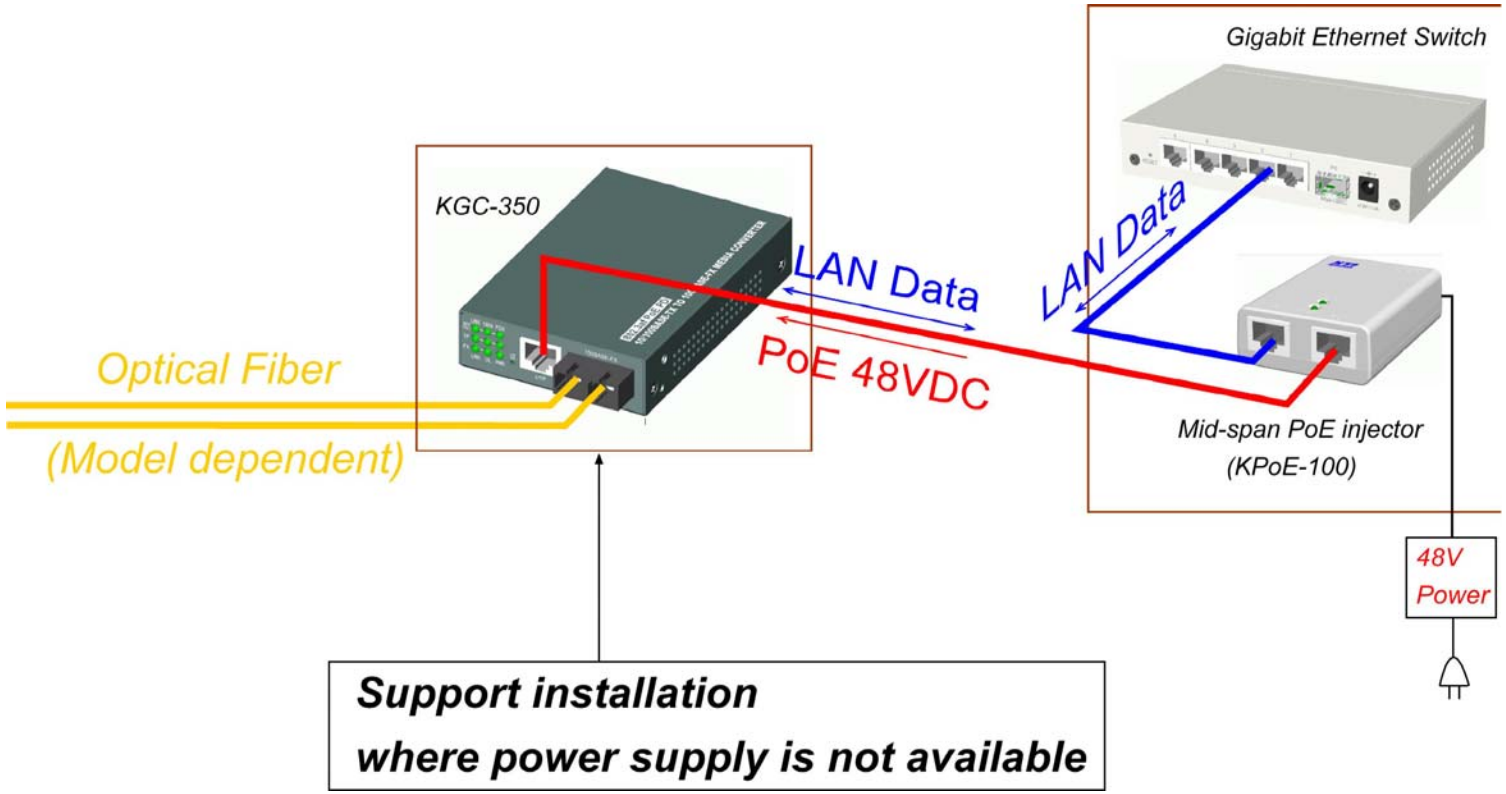

Application 2: Long Reach SMF

Application 3: Bi-Di Single Fiber

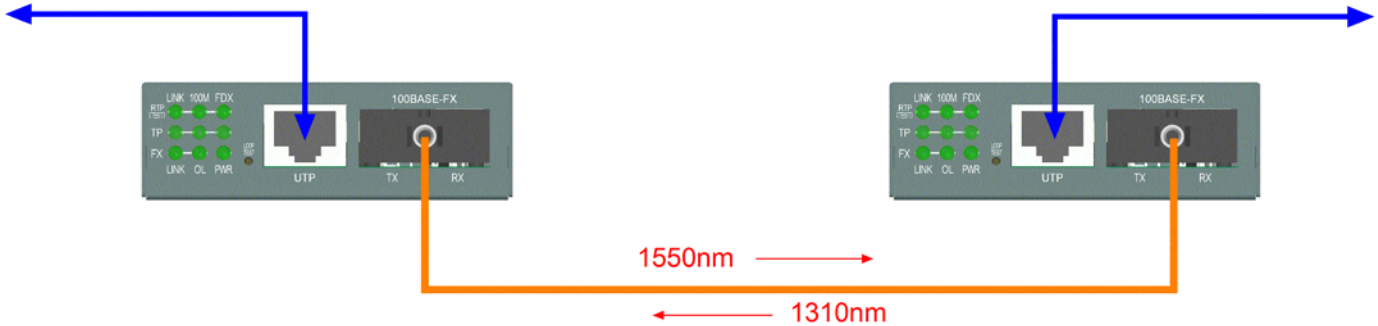

Supports single fiber Bi-Directional communication

Application 4: CWDM

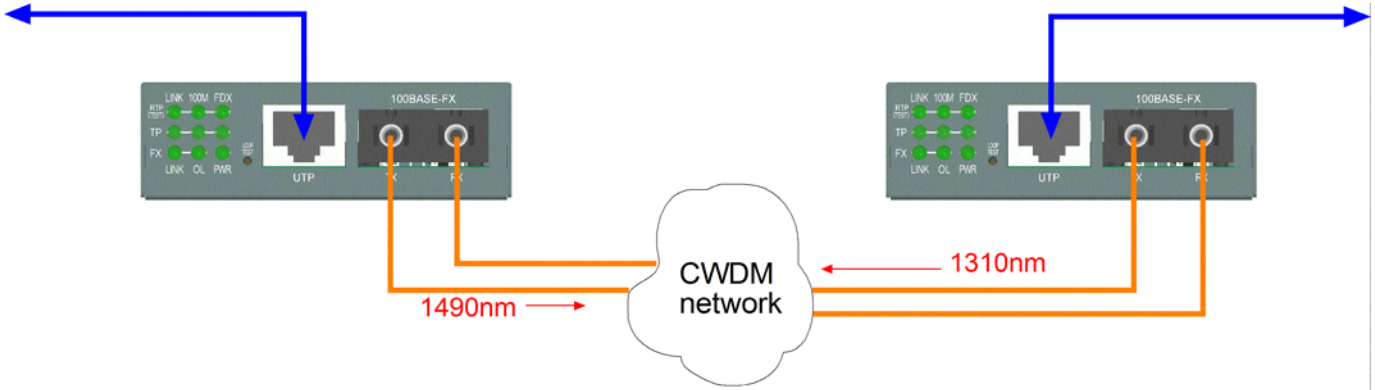

Supports CWDM communication